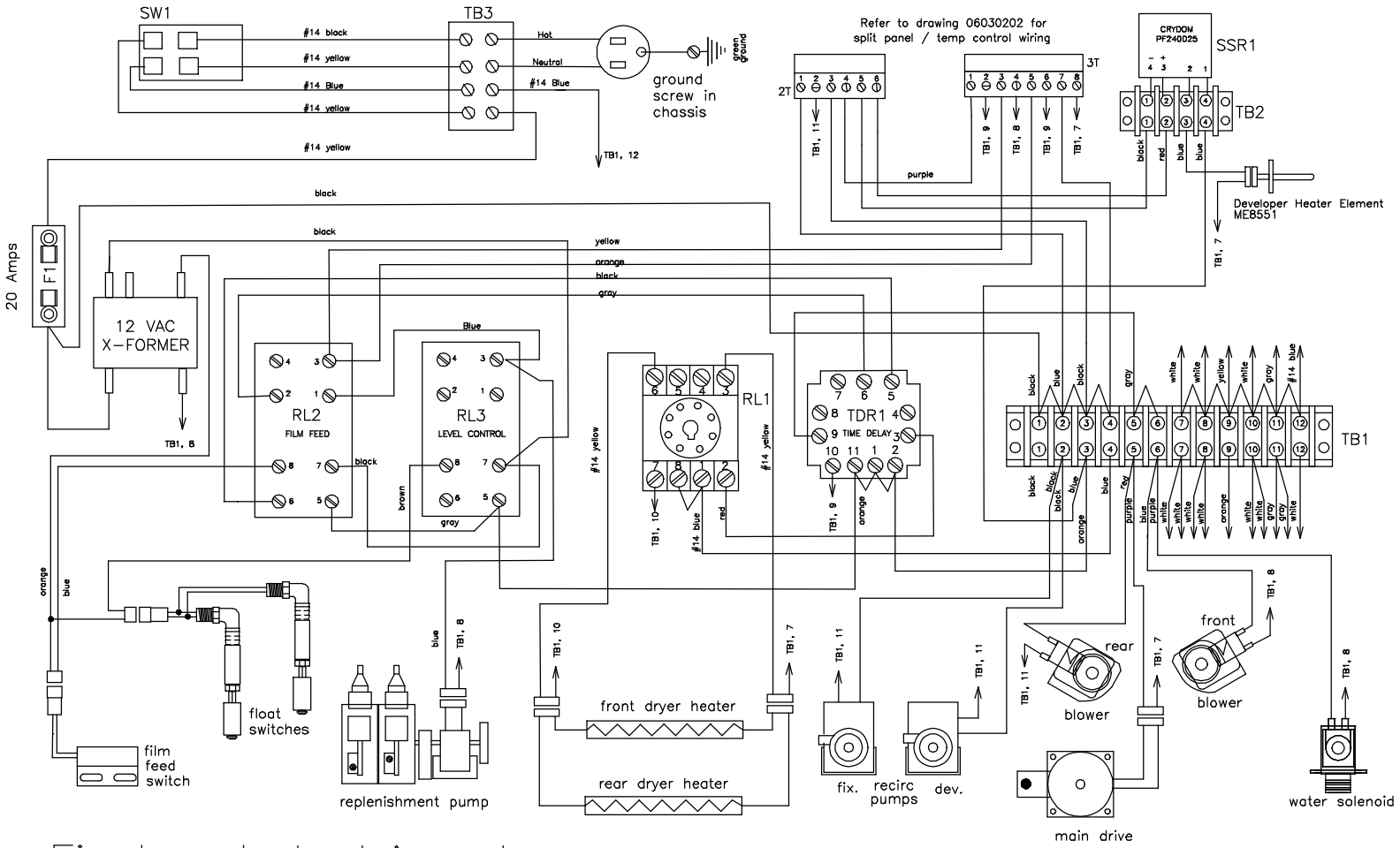

Fischer Industries, Inc.

3000S, 3000ST, 4000M Wiring Diagram, 110 VAC

Drawing No. 06030200 rev. 1 03/14/07